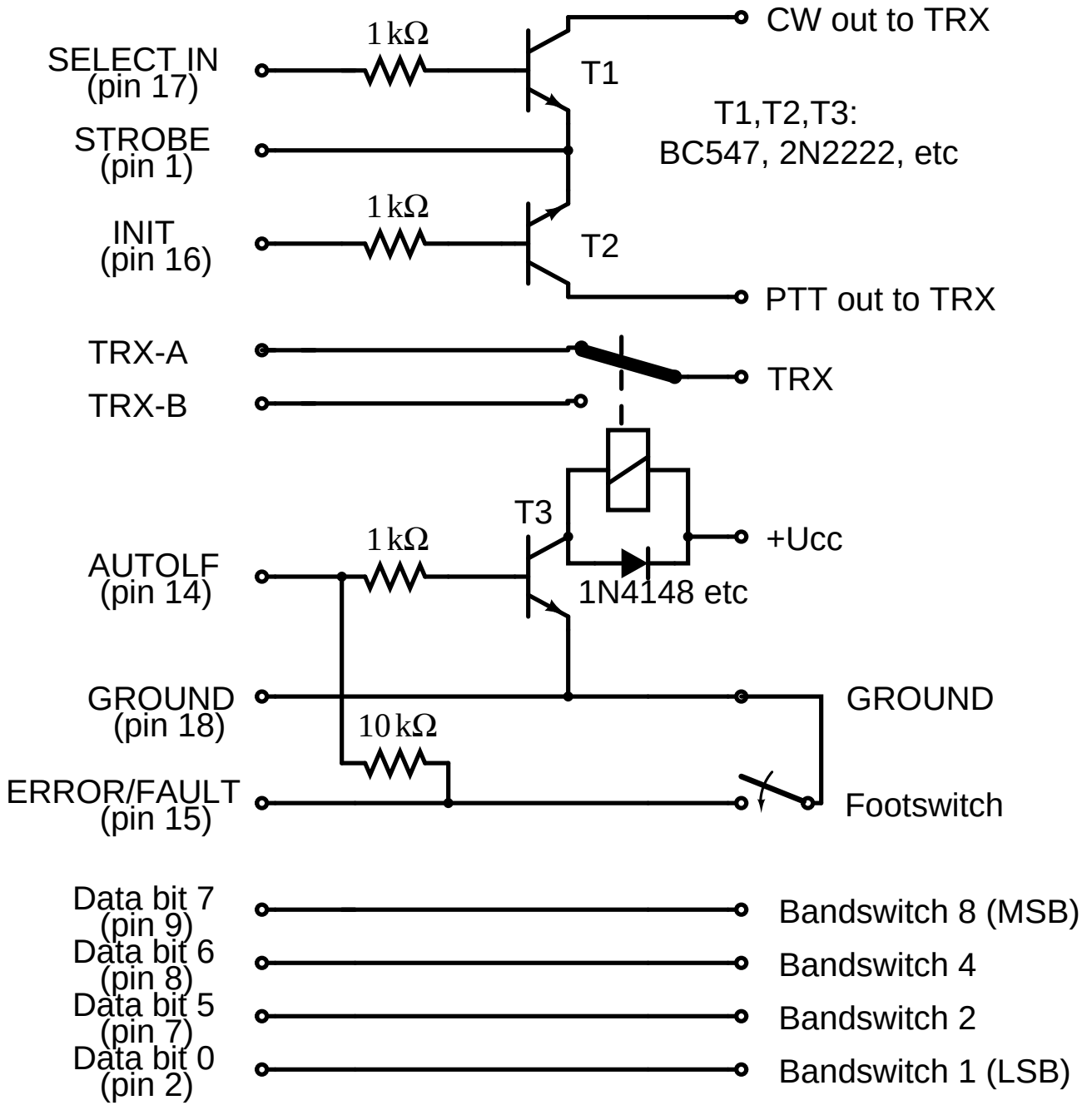
CW out to TRX
SELECT IN
(pin 17)
1 kΩ
T1
T1,T2,T3:
BC547, 2N2222, etc
STROBE
(pin 1)
1 kΩ
INIT
(pin 16)
T2
PTT out to TRX
TRX-A
TRX
TRX-B
T3
+Ucc
1 kΩ
AUTOLF
(pin 14)
1N4148 etc
GROUND
(pin 18)
GROUND
10 kΩ
ERROR/FAULT
(pin 15)
Footswitch
Data bit 7
(pin 9)
Bandswitch 8 (MSB)
Data bit 6
(pin 8)
Bandswitch 4
Data bit 5
(pin 7)
Bandswitch 2
Data bit 0
(pin 2)
Bandswitch 1 (LSB)